LASER PEGS®

The Ultimate Toy For Kids®

1070

For Boys And Girls Ages 5 And Up

57 Models+

Any creation you can build

LIGHTED

CONSTRUCTION SET INCLUDES:

- 35 Laser Pegs®
- 225 Construction parts
- 3D Lite Board®
- Instruction Manual

Requires 3 AA Batteries

Batteries NOT Included

Please read manual before you begin! Failure to follow this manual's instructions may result in damage to the 3D Lite Board®, AC Adapter and/or Laser Pegs®. Not adhering to these directions will void the manufacturer's warranty. Packing has to be kept since it contains important information.

⚠ WARNING: CHOKING HAZARD-Small parts. Not for children under 3 yrs. Do not submerge in water.

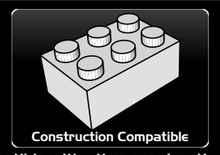

Compatible with other construction kits

EN71, RoHS COMPLIANT

This product complies to all safety requirements of ASTM F 963

MODEL INSTRUCTIONS

All additional model instructions can be downloaded at www.LaserPegs.com

Laser Peg® Parts List

There is No LED In The 90 Degree Peg

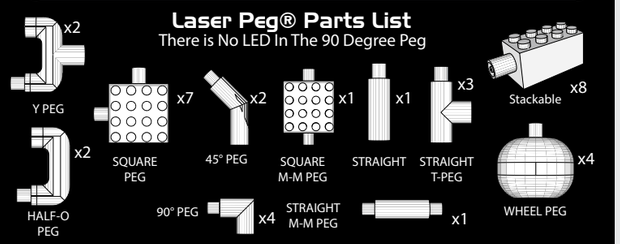

Color Code Each Laser Peg® is color coded on the circuit board inside each shape. There is No LED In The 90 Degree Peg.

Laser Pegs® link that allows you to connect to other construction kits.

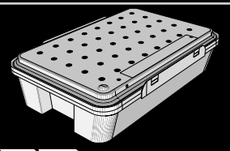

3D LITE BOARD®

Construction Parts List

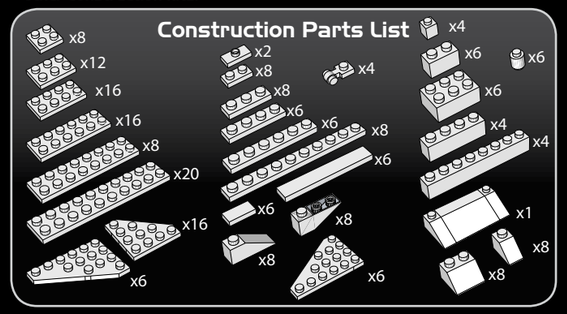

www.LaserPegs.com

This manual is copyright and cannot be reproduced or used online without Laser Pegs®Ventures LLC permission. Copyright 2012 © All Rights Reserved US Patent #7,731,558 Additional Global & Multiple Patents Pending. Laser Pegs®Ventures LLC. 8304 Consumer Ct Sarasota FL. 34240. Contact: Support@LaserPegs.com

Connecting Pegs

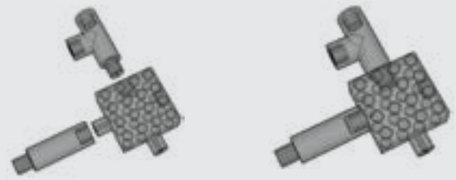

To construct with Laser Pegs®, slide two pieces together to form a connection. Slide each piece on and off smoothly. To build away from the Triangle Power Base, use the peg cord in one of the top three peg holes to illuminate your model! The 90° pegs are essential to construction but they DO NOT ILLUMINATE.

Connect Laser Pegs® to 3D Lite Board®

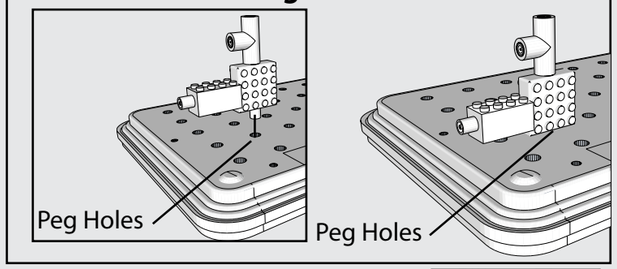

Press button to turn on/off

Push button to cycle through 3 different light settings.

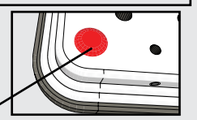

Connecting an AC Adapter

Plug AC Adapter plug into the side of the 3D Lite Board®.

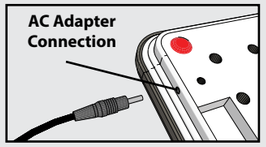

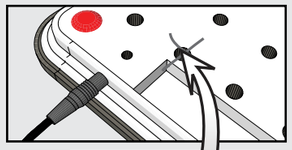

Remove all batteries from Laser Pegs® 3D lite Board® power base before using 5 volt AC adapter.

*To avoid short-circuits, keep metal objects and other un-authorized materials from obstructing the peg holes.

NEVER place AC Adapter Plug into top Peg Holes

Never connect more than 200 Laser Pegs® when using a 5 volt (2000mA) AC Adapter.

The AC adapter used with the power base are to be regularly examined for damage to the cord, plug, enclosure and other parts, and in the event of such damage, they must not be used until the damage has been repaired.

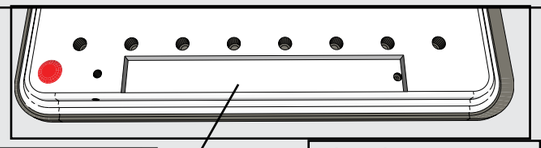

Batteries NOT Included

Requires (3AA) Batteries

Place batteries in the correct position when using.

When Using Batteries

1. Remove screws.
2. Place three AA batteries in the correct position - as displayed inside the 3D Lite Board®.
3. Push RED button to turn on!
4. Do not mix old and new batteries.
5. Do not mix alkaline, standard (carbon-zinc), or rechargeable (nickel-cadmium)batteries!
6. Exhausted batteries are to be removed from the power base.
7. Never connect more than 200 Laser Pegs®
8. Non-rechargeable batteries are not to be recharged.
9. Rechargeable batteries are only to be charged under adult supervision.
10. Rechargeable batteries are to be removed from the toy before being charged.
11. Batteries are to be inserted with the correct polarity.
12. The supply terminals are not to be short-circuited.

3D Lite Board®

Power Button

3 light settings.
Press power button to change light setting.

Peg Holes

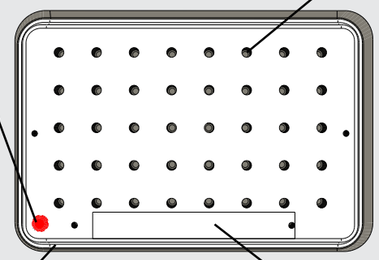

AC Adapter

INPUT is on side of 3D Lite Board®.

Battery Compartment

Requires (3AA) Batteries

Hinge

Pull outward to open.

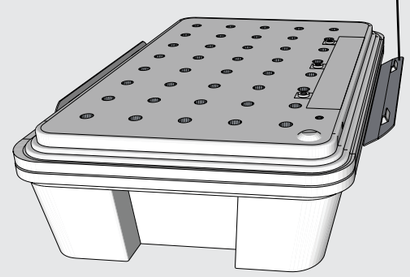

Use Phillips head screwdriver.

Tote Box

Designed for storage of Laser Pegs® parts.

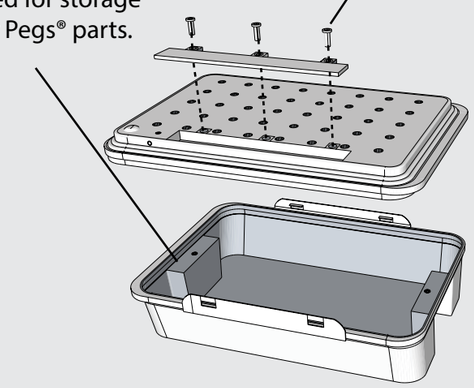

WARNING! Each Laser Peg® draws current from the batteries. Therefore, the more pegs you use, the quicker you will deplete your battery power! As the power weakens, the current will slowly fail and some Laser Pegs® will illuminate (typically the reds and yellows) and some won't. When the Laser Pegs® dim the Laser Pegs® are not broken, they just need stronger batteries or an AC Adapter.

You have 3 simple options...

1. Use a 5 volt AC Adapter –available from www.LaserPegs.com
2. Change the batteries.
3. Use high quality batteries. They will last a little longer, but they will still deplete rapidly the more laser pegs you connect!

BUNNY — A burrowing, plant-eating mammal with bright eyes, long ears and a short tail.

FACTOID

BUNNY

Model Difficulty Level

1

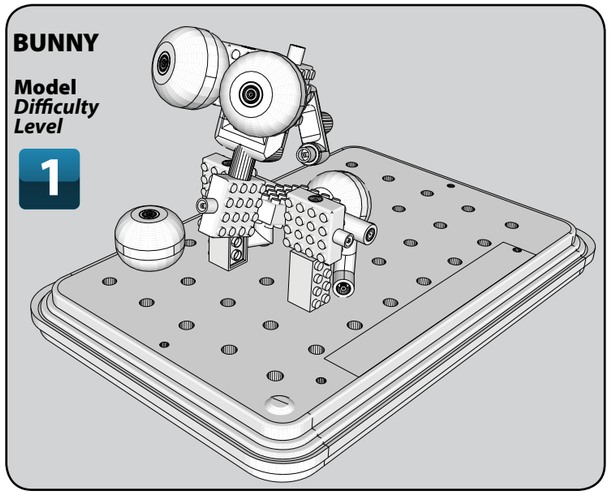

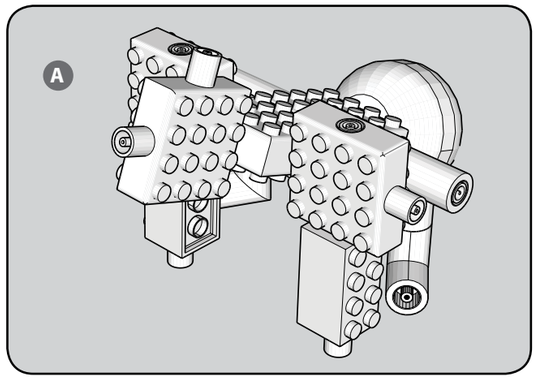

STEP 1

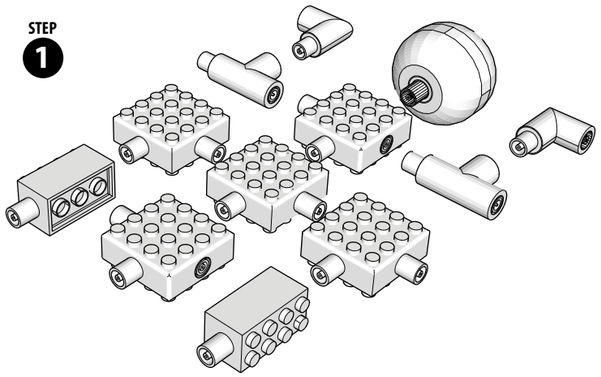

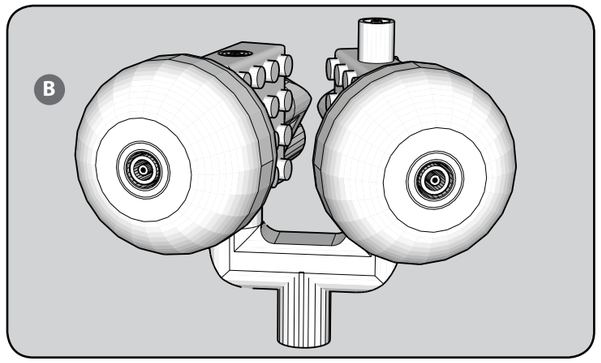

STEP 2

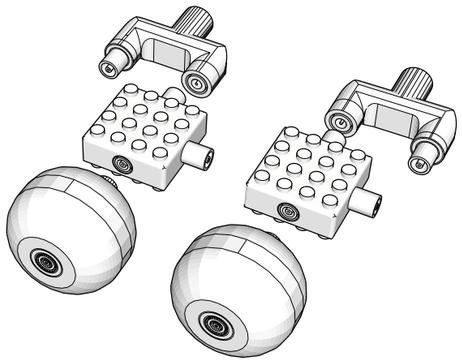

STEP 3

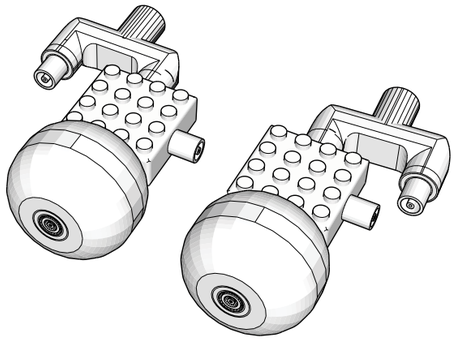

STEP 4

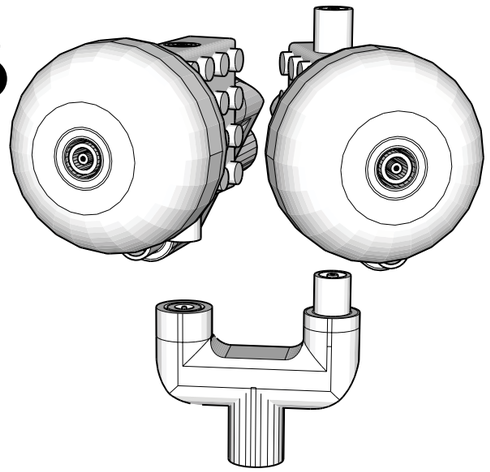

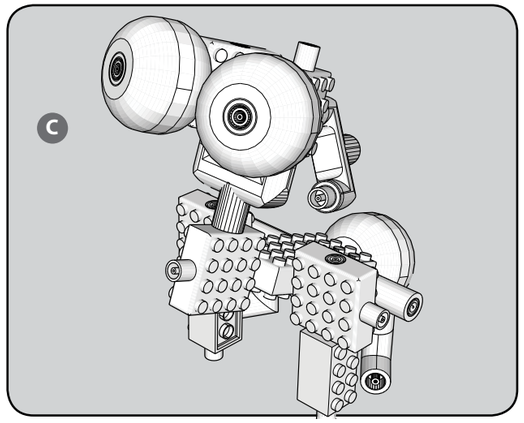

STEP 5

COMBINE

A B

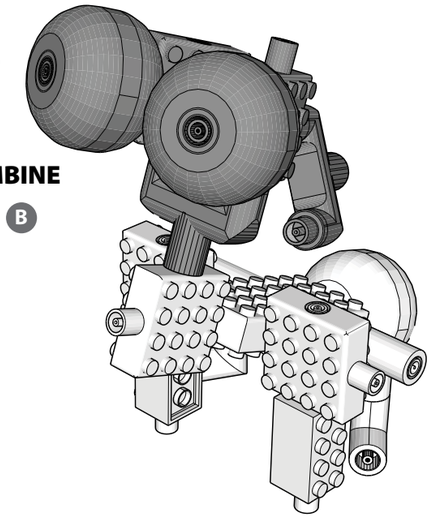

AFFIX MODEL TO 3D LITE BOARD

STEP 6

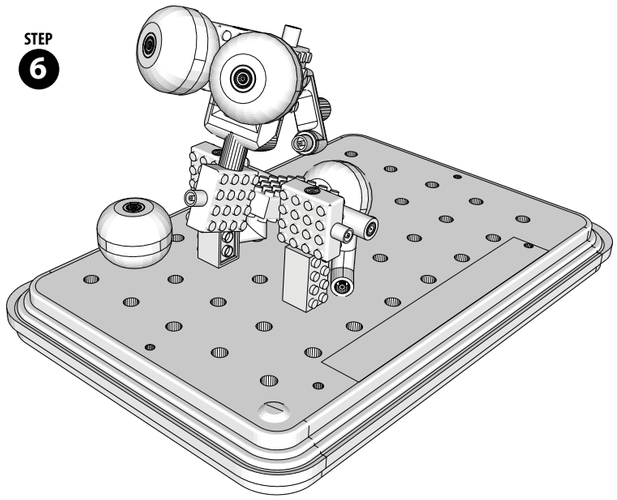

www.LaserPegs.com

Copyright 2012© All Rights Reserved Global & Multiple Patents Pending.
US Patent #7,731,558